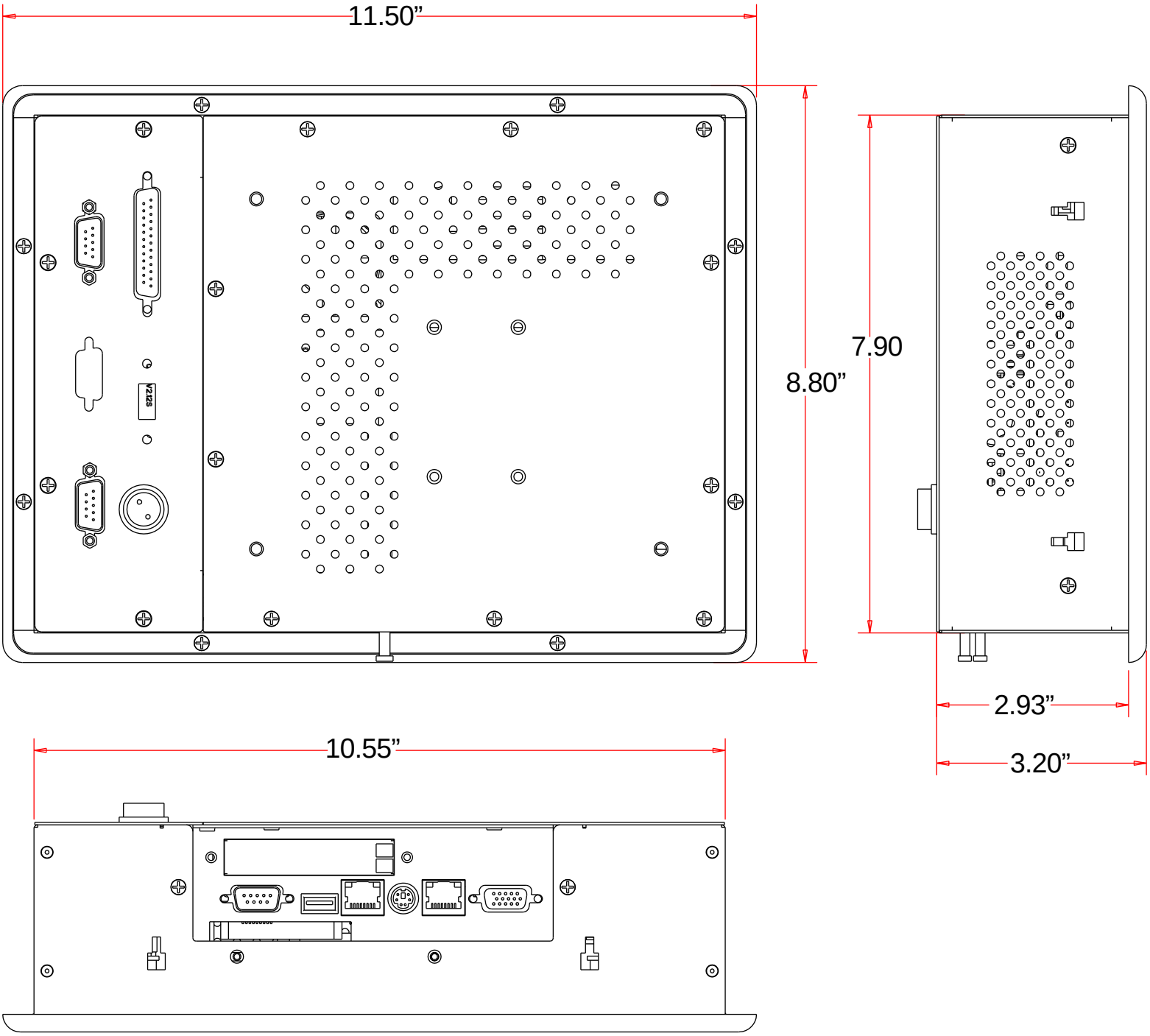ARP 3610
LINE DRAWING